PoWer TIG Series

GeKaMac®

Power TIG 270 TP

Users Manual

Please Read and Understand This Manual
Before Operating The Welding Machine

www.gedikwelding.com

This machine is for internal use only.

It complies with the WEEE Directive.

This machine has been designed in accordance with the EN 60974-1 and EN 60974-10 standards.

The machine is safe when installation, operation, and maintenance are performed in accordance with the user manual and regulations. The operator and machine owner are responsible for adhering to safety rules.

Gedik Kaynak San. Ve Tic. A.Ş. assumes no responsibility for safety or CE compliance if any modifications are made to the machine or if safety rules are not followed.

This Class A equipment is not suitable for use in homes and similar residential areas where the power supply is provided by the low-voltage public electricity network.

This machine is not household waste and cannot be disposed of in the trash.

When the machine reaches the end of its service life or becomes obsolete, it must be disposed of in accordance with regulations.

COMPLIES WITH THE WEEE DIRECTIVE.

Eco Design Statement

This machine has been designed and manufactured in accordance with the requirements of the 2009/125/EC Eco Design Directive concerning the environmentally friendly design of energy-related products.

Accordingly, machines with an idle mode are as follows.

	Idle Mode
MMA	**X**
MIG	√
TIG	√
Plazma	√
SAW	**Out of Scope**

Efficiency measurements should be conducted only on the power unit. The water cooling system should be disabled. For more information on measurements and machine settings, Gedik Kaynak Sanayi ve Ticaret A.Ş. should be consulted.

AT UYGUNLUK BEYANI

EU DECLARATION OF CONFORMITY

Bu uygunluk beyanı yalnızca imalatçının sorumluluğu altında düzenlenir.

This declaration of conformity is issued under the sole responsibility of the manufacturer.

İstanbul, Turkey, 08.03.2024

İmalatçı / Manufacturer

GEDİK KAYNAK SANAYİ ve TİCARET A.Ş.

Ankara Cad. No.306 Seyhli Pendik ISTANBUL TURKIYE

Ürün / Product	ARC WELDING MACHINE
Marka-Model / Brand- Model	POWER TIG 270 TP

Yukarıda tanımlanan beyanın nesnesi ilgili uyumlaştırılmış AB mevzuatı ile uyumludur.

The object of the declaration described above, is in conformity with the relevant union harmonisation legislation.

Direktifler / Directives 2014/30/EU & 2014/35/EU & 2009/125/EC

Uyumlaştırılmış standartlar ve uygunluğun deklare edilmesiyle ilişkili diğer referanslar.

References to the relevant harmonised standarts used and references to the other technical specifications in relation to which conformity is declared.

EN 60974-1:2018-A1:2019
EN 60974-10:2014+A1:2015

Bu ekipman, talimatlara uygun kurulduğunda, bakımı yapıldığında ve kullanıldığında belirtilen standartlara uygundur. Makine üzerinde bir değişiklik yapıldığında veya yanlış kullanımda deklarasyon geçersiz olur.

The equipment is in compliance with pertinent legislation when installed, utilized, and maintained in accordance with the enclosed instructions. This declaration will be invalid under any modification or improper use.

İmalatçı Adına imzalayan / Signed for and on behalf of:

Hatice Özel, Equipment Business Unit Director

Dear Customer

This instruction manual will help you get to know your new machine. Read the manual carefully and you will soon be familiar with all the many great features of your new product. Meanwhile, please remember well safety rules and operate as instruction.

If you treat your product carefully, this definitely helps to prolong its enduring quality and reliability things which are both essential prerequisites for getting outstanding results.

Production specification may change without advance notice.

The model you purchase is for:

☐ **PoWer TIG 270 TP**

Please find corresponding models from the "Contents".

Important:

Please take special note of safety rules and operate as instruction in case of damage and seriousinjury.

Safety Rules

“Danger” indicates an imminently hazardous situation which, if not avoided, will result in death or serious injury.

“Warning!” indicates a possible hazardous situation which, if not avoided, could result in death or serious injury. The possible hazards are explained in the text.

“Caution” indicates a possible hazardous situation which, if not avoided, may result in slight or moderate injury.

“Note!” indicates a situation which implies a risk of impaired welding result and damage to the equipment.

Utilisation for intended purpose only

- The machine may only be used for jobs as defined by the “Intended purpose”.
- Utilisation for any other purpose, or in any other manner, shall be deemed to be “not in

accordance with the intended purpose”. The manufacturer shall not be liable for any

damage resulting from such improper use.

Safety signs

- All the safety instructions and danger warnings on the machine must be kept in legible condition, not removed, not be covered, pasted or painted cover.

Safety inspection

- The owner/operator is obliged to perform safety inspection at regular intervals.
- The manufacturer also recommends every 3-6 months for regular maintenance of power sources.

Electric shock can kill

- Touching live electrical parts can cause fatal shocks or severe burns. The electrode and work circuit is electrically live whenever the output is on. The input power circuit and machine internal circuits are also live when power is on. In MIG/MAG welding, the wire, drive rollers, wire feed housing and all metal parts touching the welding wire are electrically live. Incorrectly installed or improperly grounded equipment is a hazard.
- Do not touch live electrical parts of the welding circuit, electrodes and wires with your bare skin or wet clothing.
- The operator must wear dry hole-free insulating welding gloves and body protection while performs the welding.
- Insulate yourself from work and ground using dry insulating protection which is large enough to prevent you full area of physical contact with the work or ground.
- Connect the primary input cable according to rules. Disconnect input power or stop machine before installing or maintenance.
- If welding must be performed under electrically hazardous conditions as follow: in damp locations or wearing wet clothing; on metal structures such as floors, gratings, or scaffolds; when in cramped positions such as sitting, kneeling, or lying; or in occasion when there is a high risk of unavoidable or accidental contact with the work piece or ground. Must use additional safety precautions: semiautomatic DC constant voltage (wire) welder, DC manual (Stick) welder and AC welder with

reduced open-load voltage.

- Maintain the electrode holder, ground clamp, welding cable and welding machine in good, safe operating condition. Replace damaged part immediately.

Electric and magnetic fields (EMF)may be dangerous

- If electromagnetic interference is found to be occurring, the operator is obliged to examine any possible electromagnetic problems that may occur on equipment as follow:

- minas, signal and data-transmission leads

- IT and telecoms equipment

- measurement and calibration devices

- Wearers of pacemakers

- Measures for minimizing or preventing EMC problems:

– Mains supply

If electromagnetic interference still occurs, despite the fact that the mains connection in accordance with the regulations, take additional measures

– Welding cables

Keep these as short as possible

Connect the work cable to the work piece as close as possible to the area being welded.

Lay tem well away from other cables.

Do not place your body between your electrode and work cables.

– Equipotential bonding

– Workpiece grounding (earthing)

– Shielding

Shield the entire welding equipment and other equipment nearby.

ARC rays can burn.

- Visible and invisible rays can burn eyes and skin.

- Wear an approved welding helmet or suitable clothing made from durable flame-resistant material (leather, heavy cotton, or wool) to protect your eyes and skin from arc rays and sparks when welding or watching.

- Use protective screens or barriers to protect other nearby personnel with suitable, non-flammable screening and/or warn them not to watch the arc nor expose themselves to the arc rays or to hot spatter or material.

Fumes and gases can be dangerous

- Welding may produce fumes and gases, breathing these fumes and gases can be hazardous to your health.

- When welding, keep your head out of the fume. If inside, ventilate the area at the arc to keep fumes and gases away from the breathing zone. If ventilation is not good, wear an approved air-supplied respirator.

- Work in a confined space only if it is well ventilated, or while wearing an air-supplied respirator.
- Welding fumes and gases can displace air and lower the oxygen level causing injury or death. Always use enough ventilation, especially in confined areas, to insure breathing air is safe.

Welding and cutting sparks can cause fire or explosion.

- When not welding, make sure the electrode circuit is not touching the work or ground. Accidental contact can cause sparks, explosion, overheating, or fire. Make sure the area is safe before doing any welding.
- Welding and cutting on closed containers, such as tanks, drums, or containers, can cause them to blow up. Make sure proper steps have been taken.
- When pressure gas is used at the work site, special precautions are required to prevent hazardous situations.
- Connect work cable to the work as close to the welding zone as practical to prevent welding current from passing too long and creating fire hazards or overheat.
- Wear oil-free protective garments such as leather gloves, heavy shirt, cuffless trousers, high shoes, and a cap. Wear ear plugs when welding out of position or in confined places. Always wear safety glasses with side shields when in a welding area.
- Be attention that welding sparks and hot materials from welding can easily go through small cracks and openings to adjacent areas and start a fire. Remove fire hazardous from the welding area, if not possible, cover them thoroughly. Do not weld where flying sparks can strike flammable material and where the atmosphere may contain flammable dust, gas, or liquid vapors (such as gasoline).
- Protect yourself and others from flying sparks and hot metal. Remove any combustibles from operator before perform any welding.
- Keep a fire extinguisher readily available.
- Empty containers, tanks, drums, or pipes which have combustibles before perform welding.
- Remove stick electrode from electrode holder or cut off welding wire at contact tip when not in use.

Apply correct fuses or circuit breakers. Do not oversize or bypass them.

Cylinder can explode if damaged.

- Pressure gas cylinders contain gas under high pressure. If damaged, a cylinder can explode. Since gas cylinders are normally part of the welding process, be sure to treat them carefully.
- Cylinders should be located away from areas where they may be struck or subjected to physical damage. Use proper equipment, procedures, and sufficient number of persons to lift and move cylinders.
- Always install cylinders in an upright position by securing to a stationary support or cylinder rack to prevent falling over or tipping.
- Keep a safe distance from arc welding or cutting operations and any other source of heat, sparks, or flame.
- No touching cylinder by welding electrode, electrode holder or any other electrically “hot” parts. Do not drape welding cables or welding torches over a gas cylinder.
- Use only correct compressed gas cylinders, regulators, hoses, and fittings designed for the process used; maintain them and associated parts in good condition.
- Use only compressed gas cylinders containing the correct shielding gas for the and properly operating

regulators designed for the gas and pressure used. All hoses, fittings, etc. should be suitable for the application and maintained in good condition.

- Open the cylinder valve slowly and keep your head and face away from the cylinder valve outlet.

Valve protection caps should be kept in place over valve expect when the cylinder is in use or connected for use.

Hot parts can burn

- Do not touch hot parts with bare hand or skin.
- Ensure equipment is cooled down before perform any work.
- If touching hot parts is needed, use proper tools and/or wear heavy, insulated welding gloves and clothing to prevent burns.

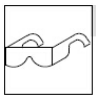

Flying metal or dirt can injure eyes

- When welding, chipping, wire brushing, and grinding can cause sparks and flying metal. It can hurt your eyes.
- Remember wear appropriate safety glasses with side shields when in welding zone, even under your welding helmet.

Noise can damage hearing

- Noise from some processes or equipment can damage hearing.

Remember wear approved ear protection to protect ears if noise level is high.

Moving parts can injure

- Stay away from moving parts such as fans.
- Stay away from pinch points such as drive rolls.
- Keep all doors, panels, covers, and guards closed and securely in place.
- Have only qualified persons remove doors, panels, covers, or guards for servicing and maintenance.
- Reinstall doors, panels, covers, or guards when servicing and maintenance is finished and before reconnecting input power.

Overuse can cause overheating

- Use machine follow duty cycle. Reduce current or reduce duty cycle before starting to weld again.
- Allow cooling period.

Do not block or filter airflow to unit.

Safety markings

Equipment with CE-markings fulfils the basic requirements of the Low-Voltage and Electromagnetic Compatibility Guideline (e.g. relevant product standards according to EN 60974).

Safety markings

Equipment with CCC markings meets the requirements of implementations rules for China compulsory

certification（e.g. relevant product standards according to GB/T 15579）.

Safety markings

CSA marked equipment meets the requirements of the North American market safety certification implementation rules (e.g. relevant product standards according to CAN/CSA-E60974,ANSI/IEC 60974)

Contents

1-GENERAL REMARKS....7

1-1 Power source features....7

1-2 Functional principle....7

1-3 Output characteristics....8

1-4 Duty cycle....8

1-5 Applications....9

1-6 Warning label....10

2-VERSIONS BRIEFS....10

3-BEFORE COMMISSIONING....11

3-1 Utilization for intended purpose only....11

3-2 Machines set-up regulations....11

3-3 Power source connection....11

3-4 Welding cables instruction....12

4-PoWer TIG 270 TP....13

4-1 System components....13

4-2 Basicequipments for welding....14

4-3 Control panel....15

4-4 Sub-menu....19

4-5 Interface....21

4-6 Installation....22

4-7 Technical data 26

4-8 Dimension.....27

4-9 Disassembly and reassembly.....29

5- TROUBLE SHOOTING.....30

6- CARE AND MAINTENANCE.....32

1-GENERAL REMARKS

1-1 Power source features

PoWer TIG 270 TP welding machine can perform DC TIG, Pulse TIG, and SMAW processes. This series welding machines enjoy reasonable static characteristic and sound dynamic characteristic.

Features and benefits:

- MCU controlled technology.
- Self-diagnostic function with error code display.
- Precise pulse control, good welding performance.
- Pre-gas, post-gas, up-slope time, down-slope time, adjustable parameters, easy to control.
- Pulse frequency, pulse ratio, pulse width can be adjusted to improve the welding performance.
- Soft switch technology, high efficiency and reliability.

1-2 Functional principle

This series welding machines apply IGBT HF inverter technology. 3- phase input volt is rectified, then transformed into HF AC by the inverter which includes IGBT, etc., reduced by HF transformer, rectified and filtered by HF rectifier, then output. After this process, the welding machinedynamic response ability has been greatly improved, size and weight of transformer and reactorare reduced noticeably, and whole machine efficiency has been improved.

The design of control circuit makes the welding machine enjoy strong ability against power grid fluctuation and perfect

welding performance.Welding machine has the following features: easy arc-starting, stable arc, good welding seam formation and capability of continuous welding current regulation.The schematic diagram is as shown in Fig. 1-2-1:

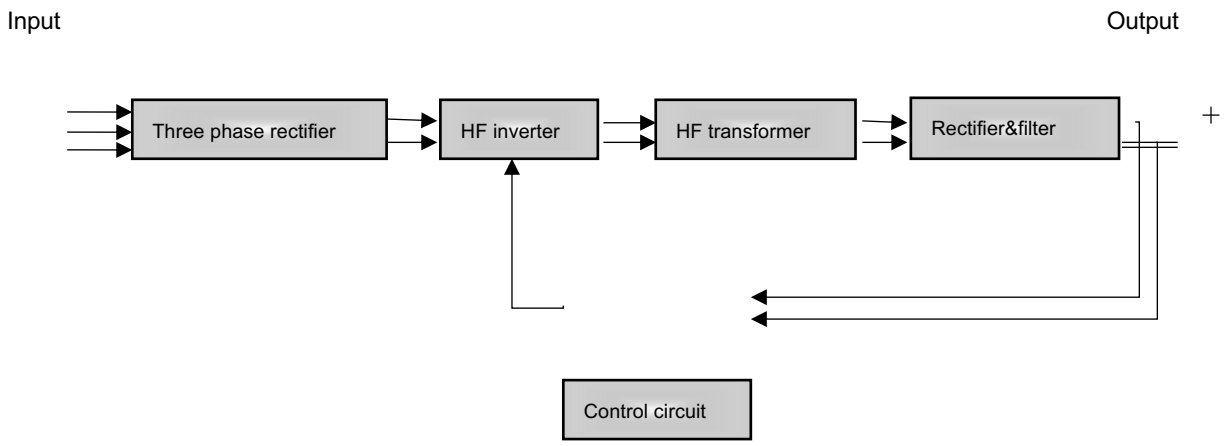

Fig. 1-2-1: Schematic diagram

1-3 Output characteristics

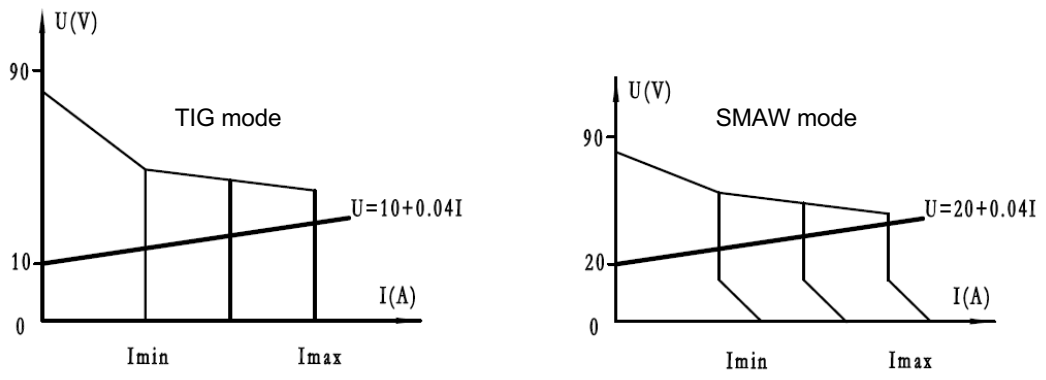

Fig. 1-3-1: Output characteristic

1-4 Duty cycle

Duty cycle is percentage of 10 minutes that a machine can weld at rated load without overheating. If overheats, thermostat(s) will open, output stops. Wait for fifteen minutes for the machine to cool down. Reduce amperage or duty cycle before welding.

NOTE! Exceeding duty cycle can damage unit and void warranty.

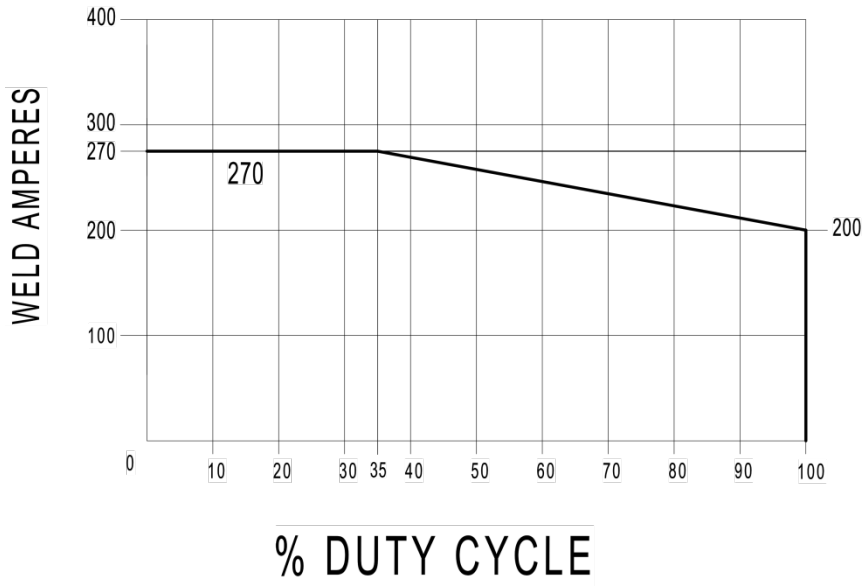

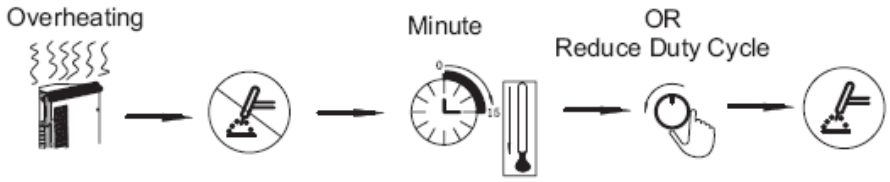

Fig.1-4-1: Duty cycle

1-5 Applications

The power source is suitable for mild steel, alloy steel, stainless steel, copper, silver and titanium welding, and is designed for the following recommended areas:

- Electric power, petrochemical construction
- Boiler and pressure vessel
- Shipyards

- Bicycle, fitness equipment, and stainless furniture manufacturing

1-6 Warning label

The warning label is affixed onto the top of the power source, and it must not be removed or painted over.

.

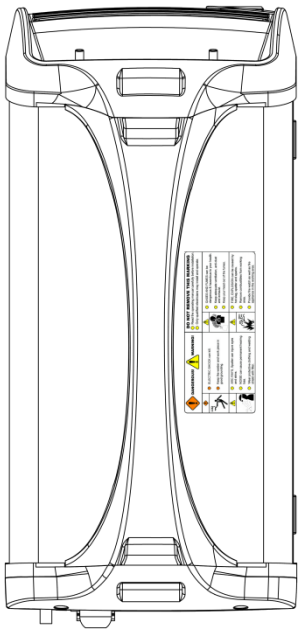

Fig.1-6-1: Warning label

2-VERSIONS BRIEFS

Professional welding of special materials requires special welding parameters. Different models of the power sources are matched to different welding.

■ PoWer TIG 270 TP

Digital control panel.Accurate preset and adjustable parameters.Suitable for thin plate pulse mode welding.The rated welding current degree is 270A, Size of this series is smaller and weight is lighter.

3-BEFORE COMMISSIONING

Warning! Operating the equipment incorrectly can cause seriousinjury and damage. Do not use the functions described here until you have read and completely understood the safety rules.

3-1 Utilization for intended purpose only

The power source may only be used for TIG, SMAW. Utilisation for any other purpose, or in any other manner, shall be deemed to be “not in accordance with the intended purpose”. The manufacturer shall not be liable for any damage resulting from such improper use.

Utilisation in accordance with the “intended purpose” also comprises:

-following all the instructions given in this manual

-performing all stipulated inspection and servicing work

3-2 Machines set-up regulations

According to test, protection degree of this power source is IP23S. However, the internal key components must be protected from direct soaking.

Warning! A machine that topples over or falls can easily cause harm to people. Please firmly install the machine on a stable place.

The venting duct is very important for safety protections. When choosing the machine location, make sure it is possible for the cooling air to freely enter and exit through the louvers on the front and back of machine. Any electro conductive metallic dust like drillings must not be allowed to get sucked into the machine.

3-3 Power source connection

- The power source is designed to run on the voltage given on the nameplate.

- The mains cables and plugs must be mounted in accordance with the relevant technical standards.

- T[illegible]r supply sockets that come with power source are designed to use strictly according to the marked voltages.

Note! Inadequately dimensioned electrical installations can lead to serious damage. The mains lead, and its fuse protection, must be dimensioned in accordance with the local power supply. The technical data shown on the nameplate shall apply.

3-4 Welding cables instruction

When welding, please pay attention to the followings.

a. The welding cables should be kept as short as possible;

b. If extended cable is used, please do as shown in Fig. 3-4-1.

Wrong

Coil the excess ground cable and welding cable in same direction respectively.

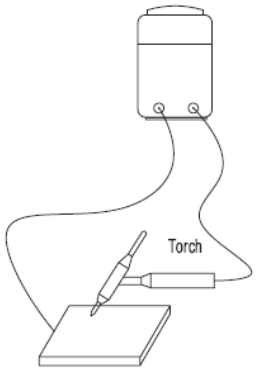

Correct

Straighten the ground cable and welding cable and make them close to each other.

Bundle the ground cable and welding cable together, running the wires close to the ground.

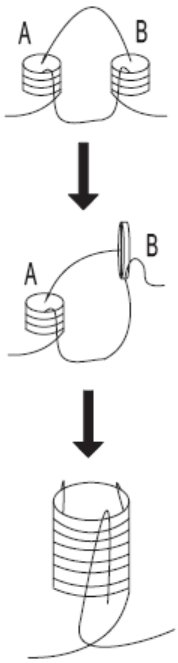

Correct

When the excess cables are only be used by rolling up, coiling the cables to two windings in reverse direction and overlap them.

The number of turns for A is same as the number of turns for B.

Handle the welding cable and ground cable according to the above-mentioned method.

Fig. 3-4-1: Welding cables instruction

4-PoWer TIG 270 TP

4-1 System components

This series of machines can be equipped with many different accessories and can be used in various special sites with different configurations.

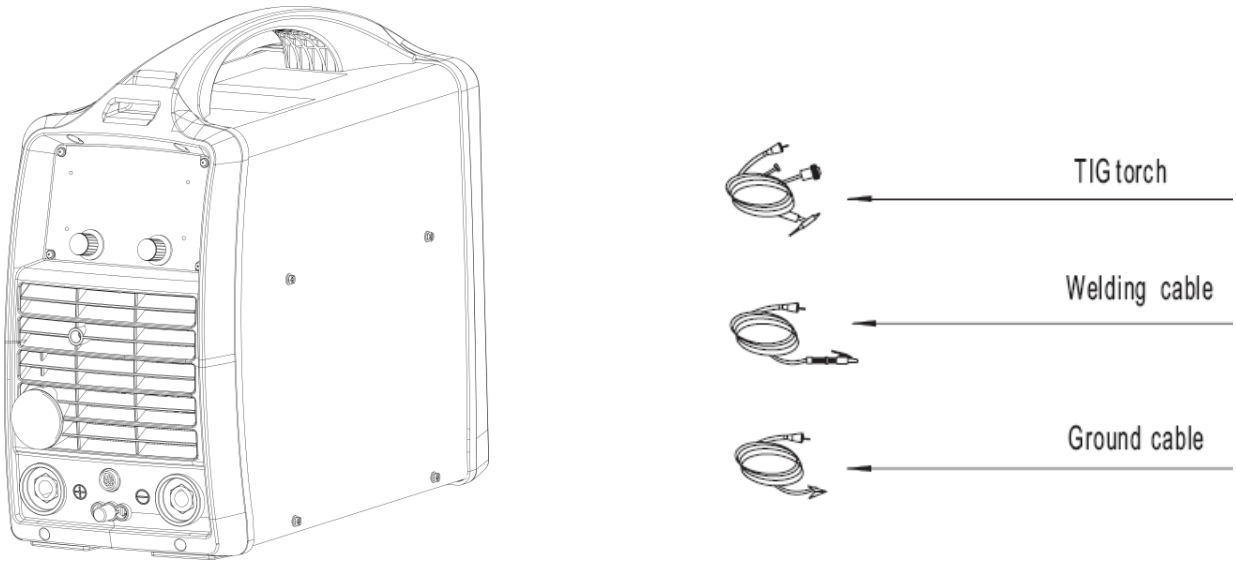

Fig. 4-1-1: System components

4-2 Basicequipments for welding

Basic equipments are needed for normal welding. Below are the lists:

TIG:

- Power source
- Ground cable
- TIG welding torch
- Gas regulator, gas hose, gas cylinder (to supply the machine with shielding gas)

SMAW:

- Power source
- Ground cable
- Welding cable

- Electrode

4-3 Control panel

Note! You may find that your machine has certain functions orsome parameters that are not described in this operating manual. Also, certain illustrations may be very slightly different from the actual controls on your

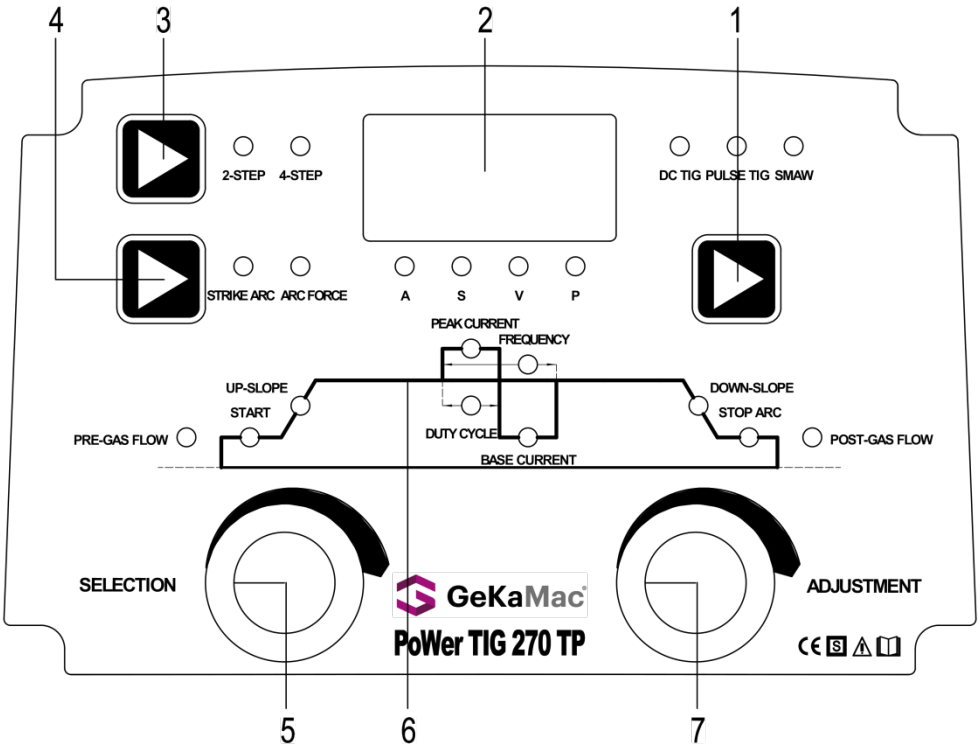

Fig. 4-3-1: Control panel

1.Welding mode selection button

Press this button to switch between DC TIG，PusleTIG and SMAW, the indicator will light up accordingly.

2.Display meter

When the welding power source works normally, it displays the current and various parameter values. When the power source is abnormal, it displays the corresponding error code and automatically stops.

3. 2-STEP/4-STEP button

SMAW mode:used to switch the display of current and voltage.the indicator will light up accordingly.

TIG mode:use to switch between 2-step and 4-step operation mode, the indicator will light up accordingly.

Torch operation mode:

Legend:

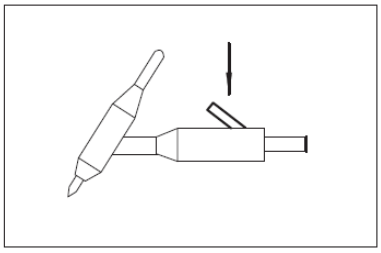

Fig. 4-3-2: Press torch trigger

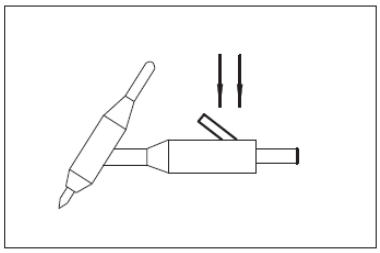

Fig. 4-3-3: Hold torch trigger

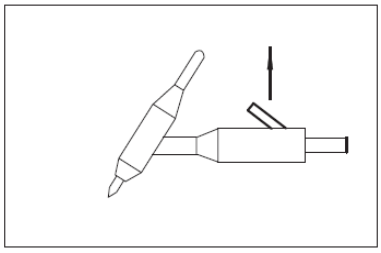

Fig. 4-3-4: Release torch trigger

2-STEP mode

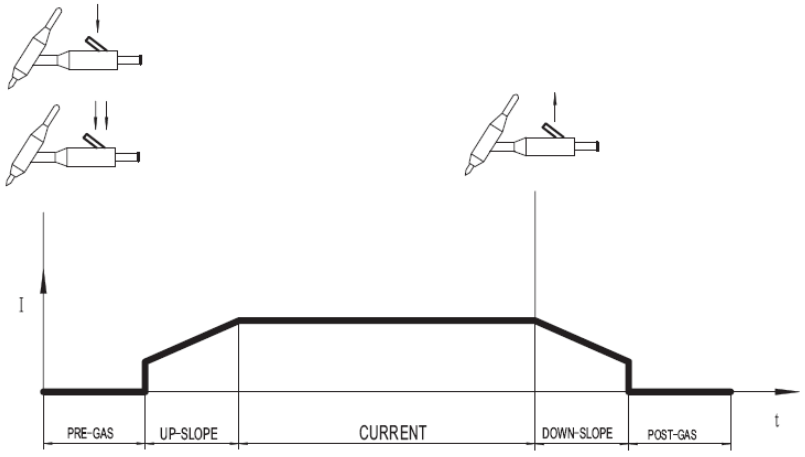

Fig. 4-3-5:2-STEP operation mode

4-STEP mode

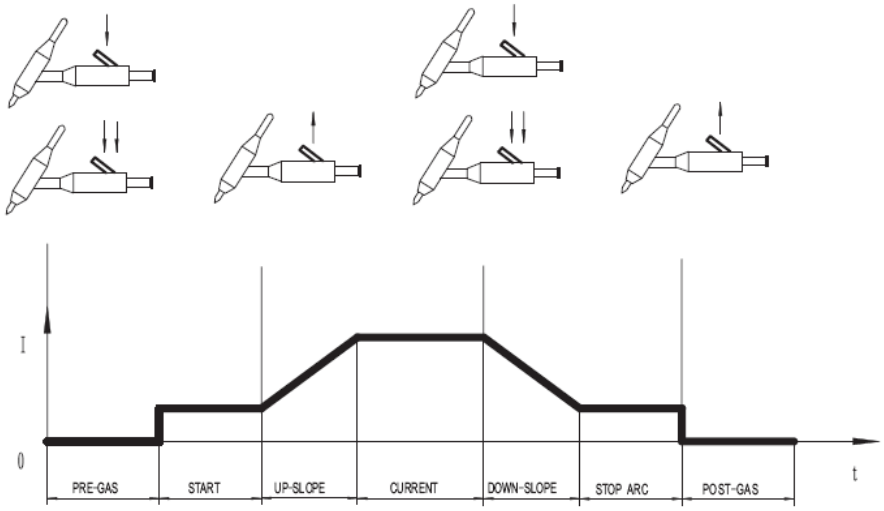

Fig. 4-3-6: 4-STEP operation mode

Repeat mode

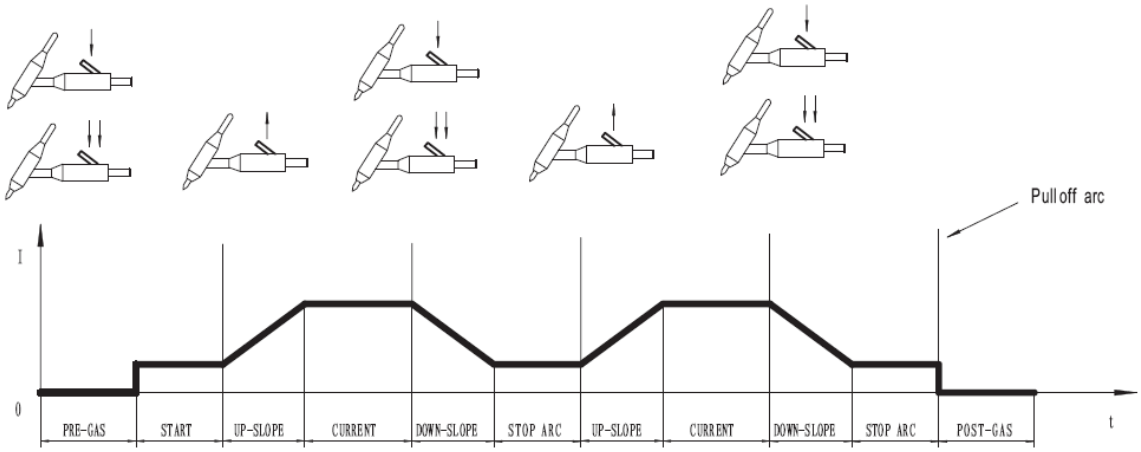

Fig. 4-3-7: Repeat mode

Spot weld mode

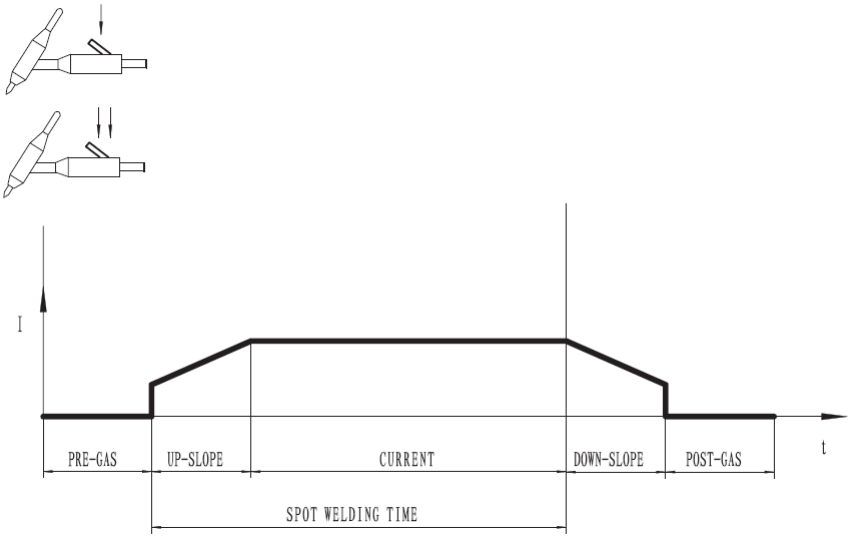

Fig. 4-3-8: Spot weld mode

4. Strike current/Arc force current selection button/Gas test

SMAW mode:Selection of stike current and arc force current.

TIG mode:use to gas test .

5. Parameter selection knob

TIG mode:it is used for selecting the parameters that are described in “6”. Rotate clockwise to select parameter from left to right; rotate anticlockwise to select parameter from right to left.

6. Parameters

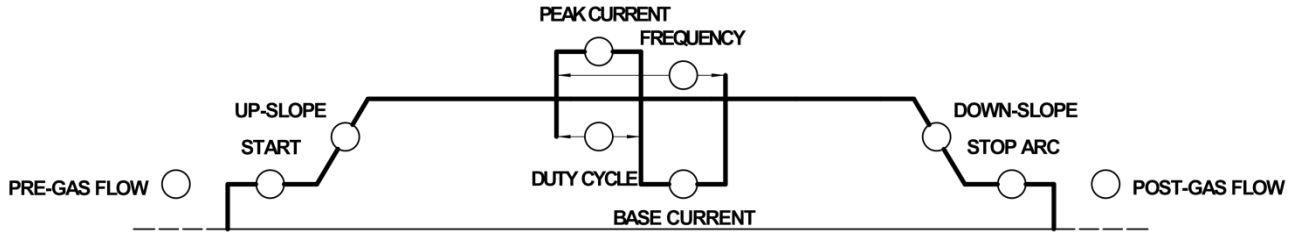

Fig. 4-3-9:Parameters

PARAMETER	Description	Unit	Setting range	Factory setting
PRE-GAS FLOW	Time of gas flow before welding	Sec	0~10	0.1
START	The initial current after the arc is started	A	5~275	50
UP-SLOPE	Time of starting current is increased until it reaches welding current	Sec	0~10	0.2
CURRENT	Welding current during DC TIG / peak current during Pulse TIG	A	5~275	50
DUTY CYCLE	The time proportion of peak current in single cycle under pulse mode	%	10~90	35
FREQUENCY	The frequency of welding current in pulse mode	Hz	0.2~30 20~500	4.0
BASE CURRENT	The arc maintenance current in pulse mode	A	5~275	50
DOWN-SLOPE	Time of welding current is continuously lowered until it reaches final current	Sec	0~20	1
STOP ARC	The current before arc blowout	A	5~275	10
POST-GAS FLOW	Time of gas flow after arc blowout	Sec	0.1~60	5.0

table. 4-3-1: TIG parameters

7. Parameter adjustment knob

TIG mode: it is used for adjusting the parameters that are described in “6”. When a parameter is selected by , rotate clockwise to increase the selected parameter; rotate anticlockwise to decrease the selected parameter. Press this button and turn to left or right for quick adjustment.

SMAW mode: adjustment welding current

Note! Thanks to the microprocessor control, the following functions can be realized:

- All parameters that have been set can be automatically stored and will retain until the next time they are

4-4 Sub-menu

Submenu operation

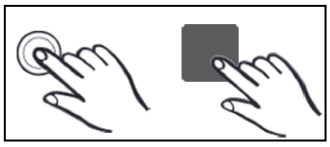

1.Press and hold the parameter selection knob and 2-step / 4-step buttons at the same time, and enter the sub menu after 5 seconds,”P”indicator lights.

2.Use the parameter selection knob to select the item to be modified

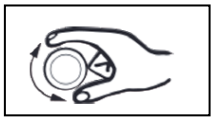

3.Modify parameter value with parameter adjustment knob

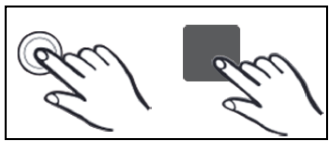

4.Exit sub menu

Fig. 4-4-1:Submenu operation

Submenu parameters

CODE	PARAMETER	Description	Factory setting
FF*	Operation mode	FF0:2-Step;FF1:4-Step;FF2: Repeat FF3: Spot welding;FF3: Special 2-step FF4: Special 4-step	FF0
FH*	Pilot arc mode	FHY: HF TIG;FHn：Lift TIG	FHY
F**	Pulse frequency	F-L:Low Pulse frequency （0.4~30Hz） F-H:High Pulse frequency （20~500Hz）	F-L
L**	Arc length of SMAW	L15~L20	L15
d**	Tungsten diameter	d0.8~6.0（mm）	d2.0
H**	Spot welding time	H0.1~5.0(seconds)	H0.5
T**	Strike arc time	T0.1~1.0(seconds)	T0.5
F**	Electrode type	F-S:Basic electrode F-F:Cellulose electrode	F-S
F**	Short-circuit protection in SMAW mode	F-A: Protected; F-B: No protection	F-A
3.1.0		Version	

4-5 Interface

Note! You may find that your machine has certain functions orsome parameters that are not described in this operating manual. Also, certain illustrations may be very slightly different from the actual controls on your machine. However, these controls function in exactly the same way.

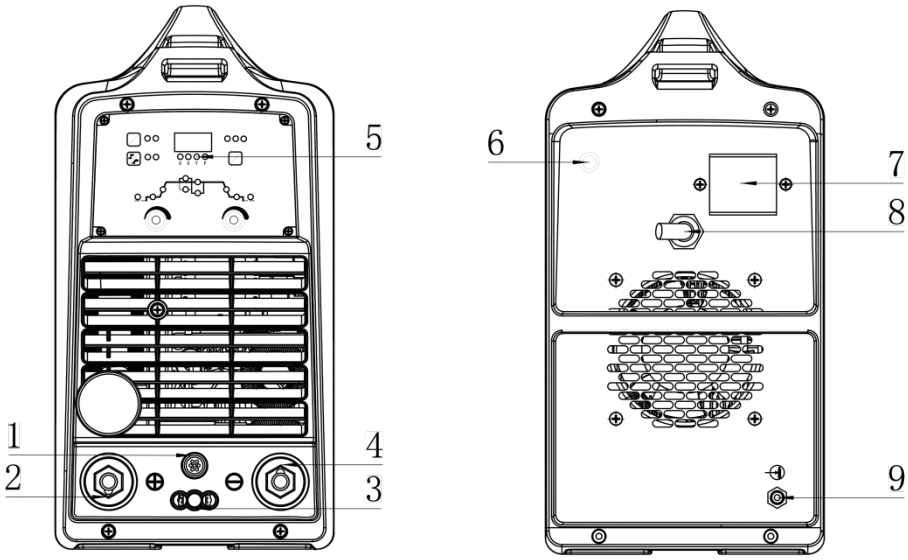

Fig. 4-5-1: interface

1.control socket

Connect the TIG torch or foot pedal switch when processing TIG welding.

PIN NO.	Description	PIN NO.	Description
1	Trigger line	4	Analog remote control(current given):+10VDC
2	Trigger line	5	Analog remote control(current given) :signal
3	Null	6	Analog remote control(current given):GND
7	Null	8	Null

Table. 4-5-1: Control socket wiring

2.Quick socket (+)

Connect electrode holder when in SMAW mode;

Connect with the workpiece when in TIG mode.

3.Gas outlet

Connect gas hose of TIG torch.

4.Quick socket (-)

Connect work piece when in SMAW mode,

connect with TIG torch when in TIG mode.

5.Control panel

6.Fuse

7.Circuit breaker

The function of circuit breaker is to protect welding machine and operator by automatic trip to turn-off power supply when overload or short circuit happens to the power source. Normally, the switch flipped to upward means power-on. To start or stop the welding machine is done by the mains switch in the distribution box. Please do not take this circuit breaker as the power switch.

8.Power supply cable

It is 4-pin cable. The yellow-green wire must be firmly grounded, the rest wires are connected with corresponding 3-phase power supply.

9.Gas inlet

Connect with Argon gas regulator with gas hose.

4-6 Installation

Warning! Electric shock is very dangerous. If the machine is plugged into the mains electricity supply during installation, there is a high risk of very serious injury and damage. Only carry out work on the machine when

- the mains switch is in the “OFF” position,

● **Installation environment requirements**

1. It should be placed indoors without direct sunlight, rainproof, low humidity and less dust. The ambient air temperature range is -10℃~+40℃.

2. The inclination to the ground should not exceed 10°.

3. There should be no wind in the welding station, if any, it should be covered.

4. The welding machine is more than 20cm away from the wall, and the distance between the welding machine is more than 10cm.

5. When using water-cooled welding torch, pay attention to anti-freezing.

● **Power supply and cable requirement**

Please note the size of fuse and circuit breaker in the table below are for reference only.

Model		270
Power supply		3 phase, AC 400V±10%, 50Hz
Min. power capacity(KVA)	Power network	18.5
Input protection (A)	Fuse	30
	Circuit breaker	40
Min. cable size (mm^2)	Power cord	≥4
	Welding cable	35
	Protective GND wire	≥4

Table 4-6-1: power supply and cable requirement

● **The connection between power cord and distributor box**

Warning!

- Never connection when equipment is power on!
- The connection must be carried out by a qualified electrician!
- Do not connect two units of power sources to the same circuit breaker!

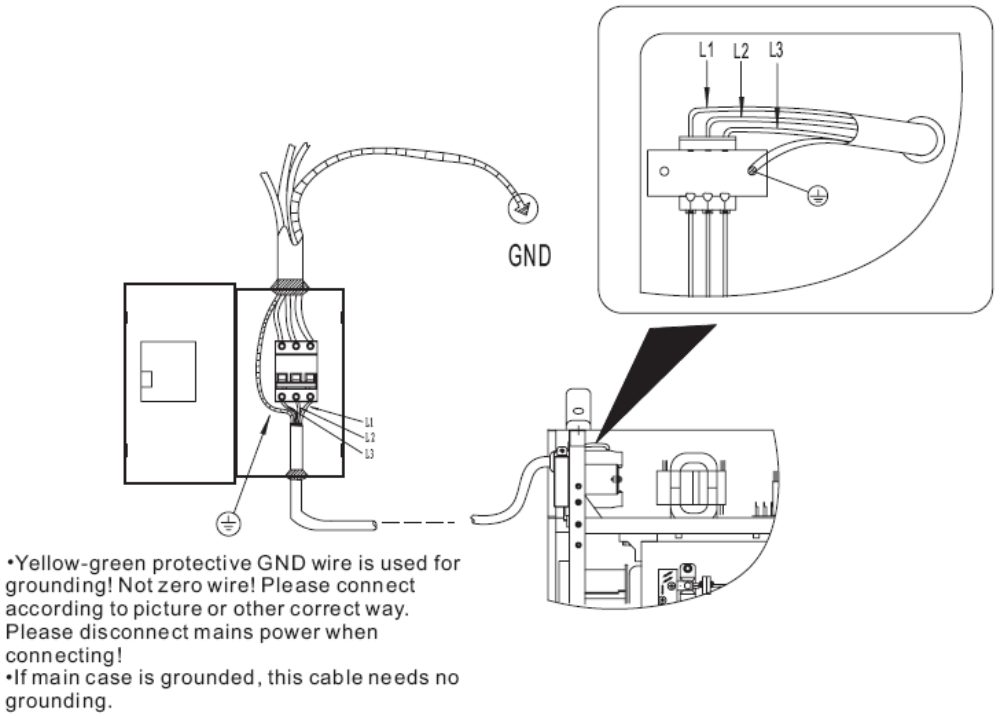

Fig. 4-6-1:Connection between power cord and distributor box

● **Gas regulator installation**

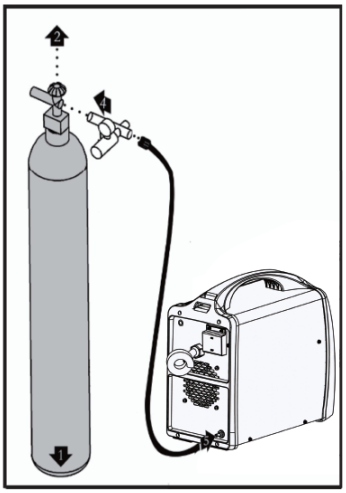

1. Take the protective cap off the shielding-gas cylinder.

2. Briefly open the shielding-gas cylinder valve anticlockwise to blow off any dust and dirt.

3. Check the tightness of pressure regulator.

4. Screw the pressure regulator onto the gas cylinder and tighten it.

5. Connect the shielding-gas connector to the pressure regulator.

Fig. 4-6-2: Gas regulator installation

● **TIG welding**

Warning! Operating the machine incorrectly can cause serious injury and damage. Do not use the machine until you have read the following:

- Safety rules

Warning! If the machine is plugged into the mains supply and the mains switch is in "O" position during preparation, there is a high risk of very serious injury and damage. Only carry out preparation when the

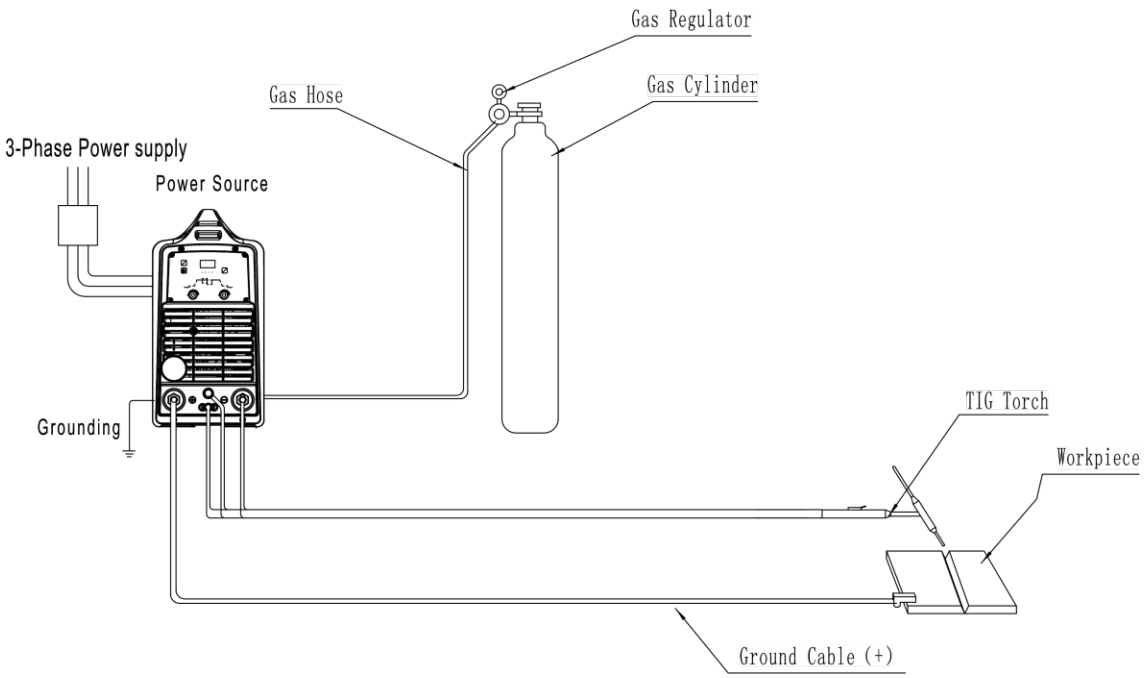

Fig. 4-6-3: Connection and operation for TIG welding

● **STICK welding**

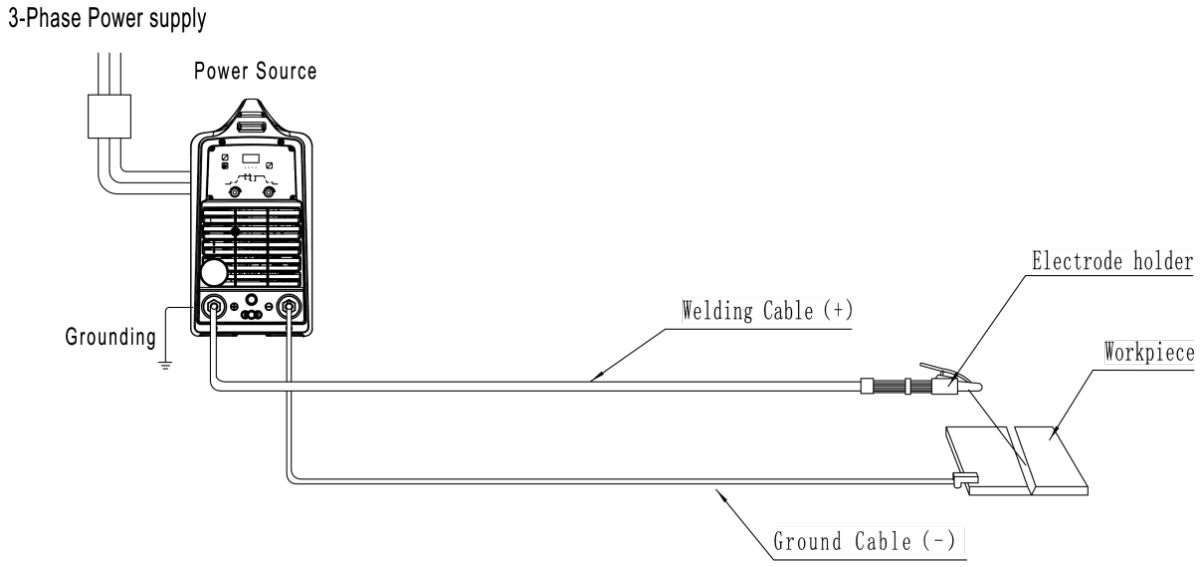

Fig. 4-6-4: STICK welding connection

4-7 Technical data

Note! Please use the machine under the allowed power supply voltage range marked in the nameplate. The technical data with the basic input voltage are listed as the Table 4-7-1.

Model	270
Rated input voltage	3 phase,AC400V±10% 50Hz
Rated input capacity (KVA)	14
Rated input current (A)	15.6
Rated duty cycle (%)	35%@270A
OCV(V)	77V

Rated current / voltage range	TIG：5A/10.2V～270A/20.8V
	SMAW：5A/20.2V～270A/30.8V
IP class	IP23S
Insulation class	H
Power factor	0.9
Weight (Kg)	17-18

Table. 4-7-1: Technical data

4-8 Dimension

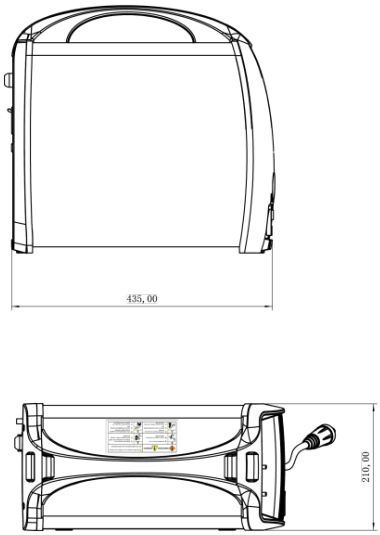

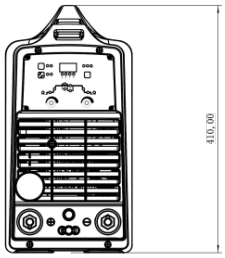

NO.	Item	Unit(mm)	Unit(inches)
1	length	435	17.1
2	Width	210	8.3
3	Height	410	16.2

Fig. 4-8-1: Dimension

Table. 4-8-1: Dimension

4-9 Disassembly and reassembly

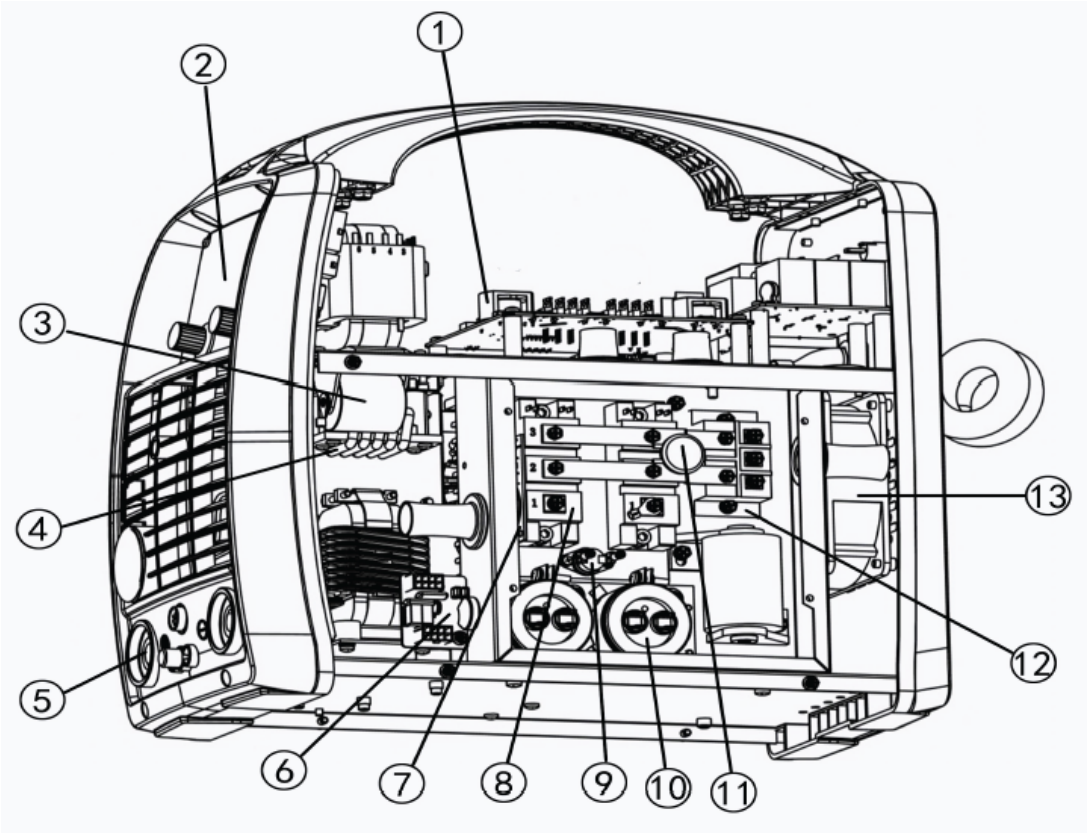

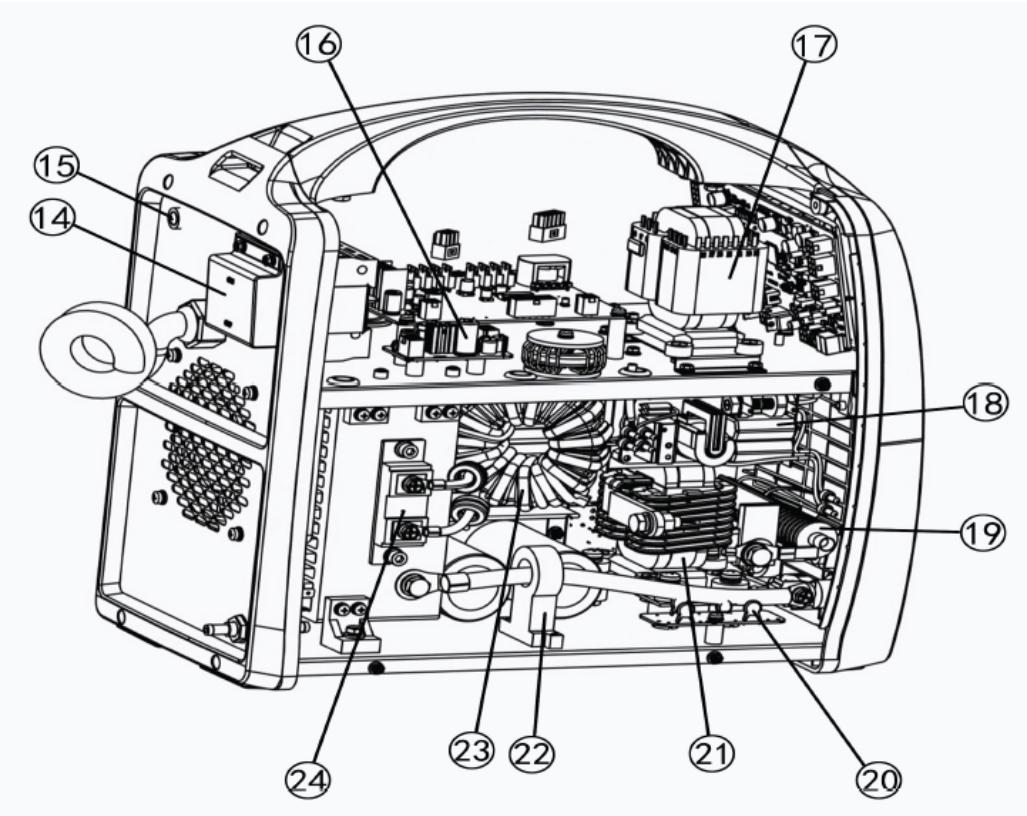

Fig. 4-9-1: Disassembly and reassembly

NO.	Item	Stock NO.	Remark
1	Drive board	210310-00135	
2	Display board	210580-01309	
3	Polypropylene capacitor	722001-00141	
4	Current exchange inductor	220281-00008	
5	Quick socket	740002-00080	
6	Remote adapter board	220569-00002	
7	Current transformer	220149-00175	
8	IGBT module	735007-00046	
9	Temperature relay	745008-00008	
10	Polypropylene capacitor	722001-00062	
11	Varistor	720021-00017	
12	Three phase rectifier module	735005-00009	
13	Fan	746002-00046	
14	Main circuit breaker	745011-00066	
15	Fuse	745007-00010	
16	Fan power board	210100-00037	
17	Power transformer	763001-00343	
18	HF board	220900-00292	
19	Pilot arc coil	220431-00074	
20	Rack capacitor board	220293-00009	
21	Output reactor	763004-00215	

22	Current sensor	753001-00010	
23	Main transformer	220629-00372	
24	Fast recovery diode module	735006-00029	

Table. 4-9-1: Main components list

5- TROUBLE SHOOTING

Warning! An electric shock can be fatal. Before opening the machine:

-Switch it off and unplug it from the mains

-Unplug machine from the mains

-Put up a clearly legible and easy-to-understand warning sign to stop anybody inadvertently switching it back onagain

-Check to make sure the electrically charged components (e.g.capacitors) have been discharged.

-Bolt in outer case also works for ground connection. Never use other bolt, which can not work for groundconnection.

Error code

The welding machine will automatically protect when certain abnormalities occur, and the displayed alarm code.

No.	Code	Description	Cause
1	E10	Torch trigger short circuit fault	1) Damaged torch switch The torch switch is pressed by mistake for a long time, and no current is output. 2) Control cable short 3) Shorted signal line 4) Display control board failure
2	E14	Fan failure	1) Fan damage 2) The fan power board is damaged 3) The display control board is damaged
3	E19	Overheating fault	1) Environmental reasons Ambient temperature is higher than 40 degrees

			The air inlet of the welding machine is too close to the wall Air inlet of welding machine is blocked The radiator has accumulated too much dust and has not been cleaned for a long time 2) Reason for use Welder use exceeds rated load rate Welding specifications are greater than rated output 3) Circuit failure Fan failure Fan power board failure Signal cable is broken Temperature relay failure Main circuit device failure Display control board failure

Table. 5-1: Error code

Machine problem, cause and remedy

Note! The following troubles and causes are uncertain. However, during the normal welding, that might

No.	TROUBLE	CAUSE	REMEDY
1	After turning on the power, the welding machine does not have any action	1) Power problems * Missing phase * The circuit breaker in the distribution box or the welding machine is damaged * Input cable connection is not good 2) -Welder fuse tube is broken	1)Check power supply 2)Check fuse
2	Circuit breaker trips automatically except working for a long time in high welding current	1)The following components may be probably damaged: IGBT module, 3 phase rectifier module, output diode module, and other components 2)Short circuit	Check and replace
3	Welding current is not stable	1)-Power problems 2)-Poor contact in the output cable 3)-The output cable is rolled and bent excessively 4)-Incorrect welding specifications	1)Check power source 2)Check and replace

		5)-The base material has oil, impurities or paint coating on the surface 6)-Damaged display control board 7)-Defective current sensor	
4	The welding machine does not work after pressing the torch switch	-Damaged torch switch -The control cable is broken or has poor contact -Damaged display control board	Check and replace
5	Welding parameters are not adjustable	1)-The control cable is broken or has poor contact 2)-Damaged display board 3)-The main control board is damaged 4)-Defective current sensor	Check and replace
6	Digital tube does not display	1)Power transformer is damaged 2)Display board is damaged 3)Fuse is damaged	Check and replace
7	Fan does not run	1)-Fan is broken 2)-Fan power board is damaged 3)-Damaged display control board	Check and replace
8	Weld protection abnormal	1)-Incorrect gas flow adjustment 2)-Insufficient gas remaining 3)-Trachea leak 4)-Defective gas regulator 5)-Defective solenoid valve 6)-Damaged display board	Check and replace

Table. 5-2:Trouble shooting

6- CARE AND MAINTENANCE

- **Before open the machine**

Warning! An electric shock can be fatal. Before opening the machine**:**

- Switch it off and unplug it from the mains
- Put up a clearly legible and easy-to-understand warning sign to stop anybody inadvertently switching it back on again
- Check to make sure the electrically charged components (e.g.capacitors) have been discharged

Maintenance of welding power source

Please follow the instructions as below to ensure normal use of power source

- Conduct safety check at regular intervals (see “Safety rules”)

- Dismantle machine side panels and clean machine inside with clean and low-pressurecompressed air by professional technician, not less than twice per year. Clean the components at a certain distance only

- If a lot of dust has accumulated, clean the cooling-air ducts.

Daily maintenance

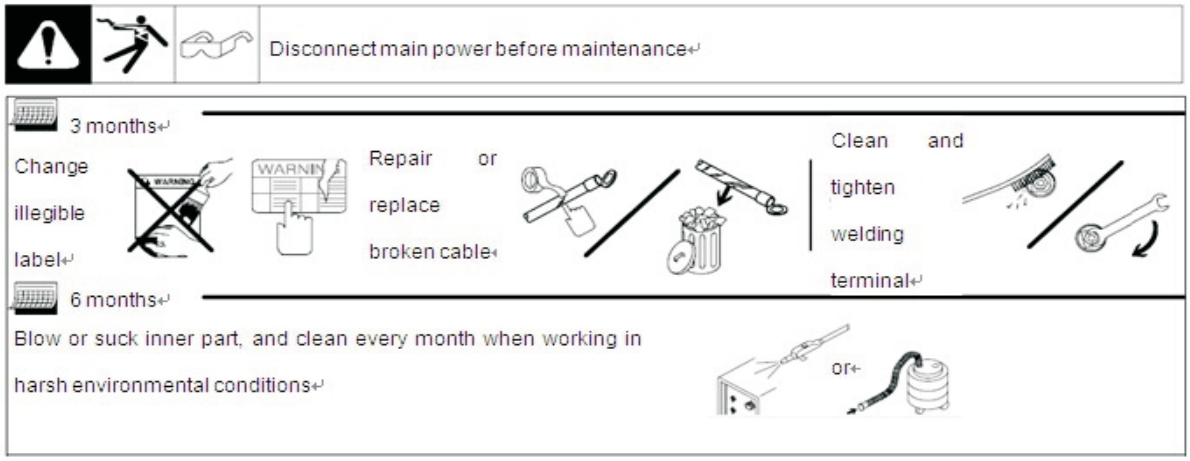

Fig. 6-1: Daily maintenance

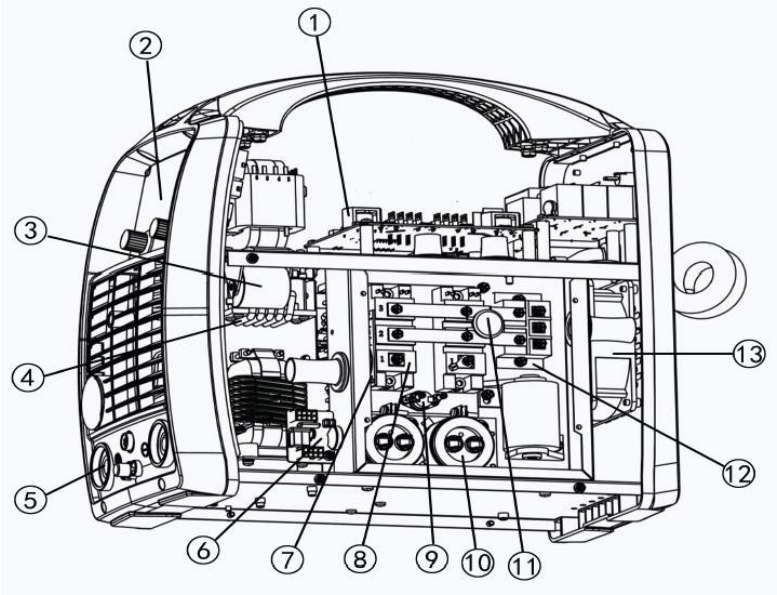

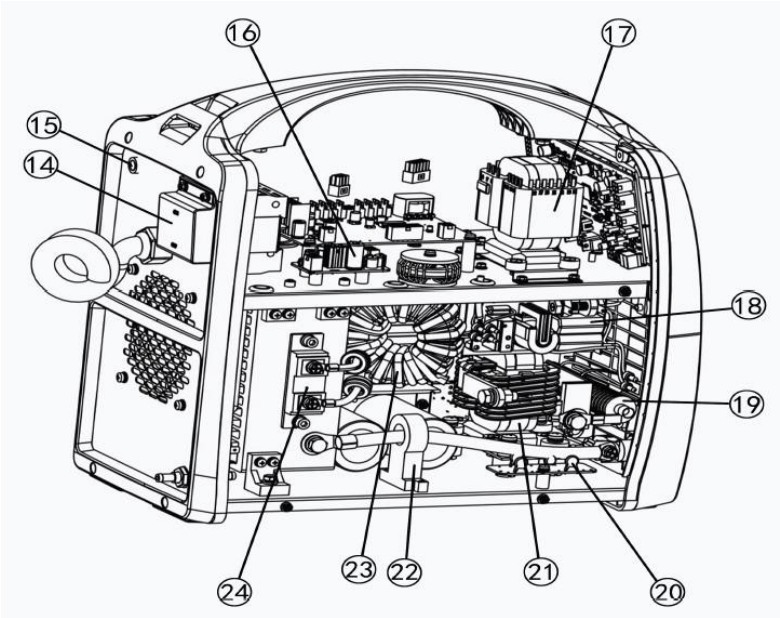

NO.	Item	Stock NO.	SAP KODU
1	Drive board	210310-00135	6064000395
2	Display board	210580-01309	6064000396
3	Polypropylene capacitor	722001-00141	6064100476
4	Current exchange inductor	220281-00042	6064100477
5	Quick socket	740002-00080	6064200217
6	Remote adapter board	220569-00002	6064000397
7	Current transformer	220149-00175	6064100478
8	IGBT module	735007-00046	6064100213
9	Temperature relay	745008-00044	

10	Polypropylene capacitor	722001-00062	6064100162
11	Varistor	720021-00017	6064100167
12	Three phase rectifier module	735005-00009	6064100479
13	Fan	746002-00046	6064100480
14	Main circuit breaker	745011-00066	6064200437
15	Fuse	745007-00010	
16	Fan power board	210100-00037	6064000398
17	Power transformer	763001-00343	6064100481
18	HF board	220900-00292	6064100482
19	Pilot arc coil	220431-00074	6064100483
20	Rack capacitor board	220293-00009	6064000468
21	Output reactor	763004-00215	6064100484
22	Current sensor	753001-00010	6064100485
23	Main transformer	220629-00372	6064100486
24	Fast recovery diode module	735006-00029	6064100173

Manufacturer

Üretici: Shandong Aotai Electric Co., LTD.
Üretici Adresi: 282 Bole Ave, High-tech Development Zone, Jinan, Shandong 250101, P.R. China
İletişim bilgileri:
Tel: +86-531-81921006
Fax: +86-531-88876665

Importer
İthalatçı: Gedik Kaynak San ve Tic A.Ş.
İthalatçı Adresi: Ankara Cad No: 306 Seyhli 34906 Pendik, İstanbul/Türkiye
İletişim Bilgileri:
Tel: +90-216-3785000
Fax: +90-216 3782044